Senseo® Switch

HD7892/60
HD7892/61

Service
Service
Service

Philips Consumer Lifestyle

Service Manual

Product information

- This product meets the requirements regarding interference suppression on radio and TV.
- After the product has been repaired, it should function properly and has to meet the safety requirements as officially laid down at this moment.

Technical information

- Voltage : 220 - 240 V
- Frequency : 50 Hz
- Power consumption : 1400 W
- Stand-by power consumption : <0,5 W
- Color setting : Deep Black
- Cups at the same time : 2 to 7
- Brewing time one cup : 30 sec
- Capacity water tank : 1 L
- Cord length : 0.8 m
- Max.cup height : 130 mm
- Pump pressure : 1 bar
- Brewing time for a jug : 8.5 min
- Dimensions (W x D x H)
  - Packaging : 466 x 242 x 322 mm
  - Product : 150 x 400 x 270 mm
- Weight
  - Incl. packaging : 2.4 kg
  - Product : 1.75 kg

- **Materials**
  - Podholder : Stainless steel
  - Podholder handle : PP
  - Top collector, Podholder spouts : POM
  - Housing, Driptray cover, Back plate : ABS
  - Water container : SAN
  - Water container lid, Driptray : PP
  - Brewchamber bottom : PA
  - Lid cover, Baseplate : ABS
  - Buttons : TPE
  - Lever : PC

- **Consumer Replaceable Parts**
  - CP9068/01 Insulated jug
  - CP9069/01 Insulated juglid
  - CP0397/01 Padholder assy Switch 1-cup Deep black
  - CP0398/01 Padholder assy Switch 2-cup Deep black
  - CP0399/01 Top collector Deep black
  - CP0400/01 Driptray cover Deep black
  - CP0401/01 Driptray Deep black
  - CP0402/01 Filter holder + Lid
  - CP0403/01 Coffee spoon
  - CP0404/01 Water container transparent + Lid Deep black

Optional (accessories)

- No specific issues

Published by Philips Consumer Lifestyle Printed in the Netherlands
© Copyright reserved Subject to modification

16/06

PHILIPS

General coffee specifications:

In-cup volume (mL)	1-cup (ml)	2-cup (ml)
General version	122	244
French version	100	200

Temperature indication (°C)	1st cup temperature	2nd and further cup temperature
General version (122 ml)	>74 °C	>76 °C
French version (100 ml)	>69 °C	>73 °C
Measured in full Jug (7 cups)	≥80 °C	

Measurement specification

Water spec (without pod, in mL)	Western Europe (ml)	French (ml)
1-cup (with 1-cup pod holder)	133 ± 10	109 ± 10
2-cup (with 1-cup pod holder)	266 ± 20	218 ± 20

Electical diagram

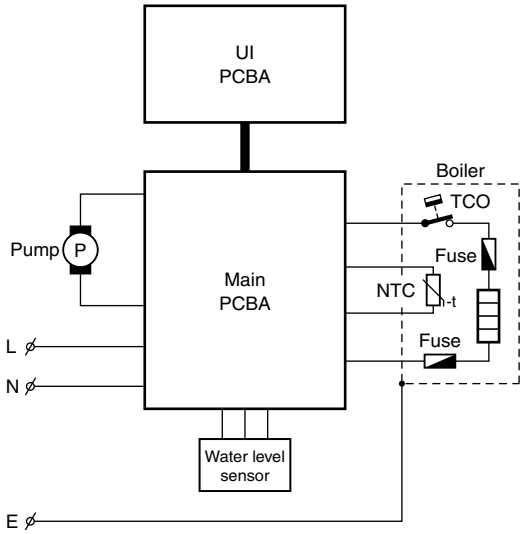

User interface layout

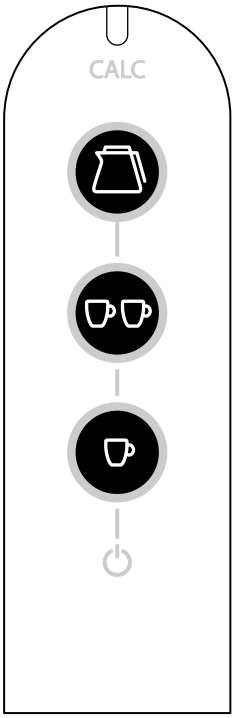

Functional diagram

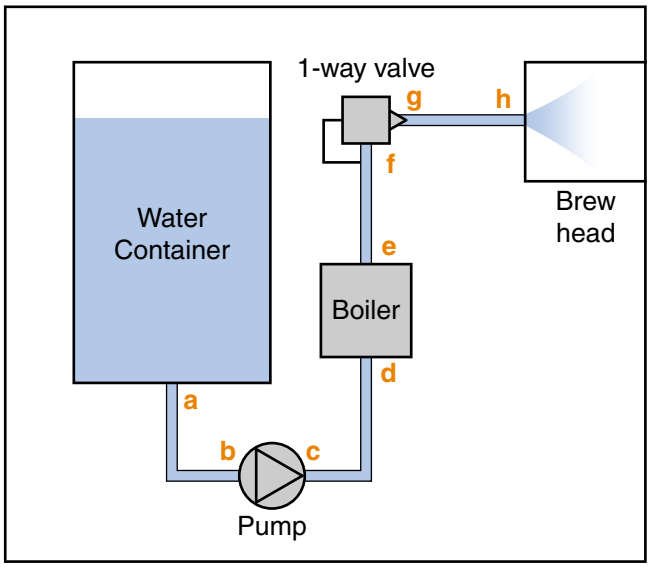

Make sure the appliances cordset is disconnected from the mains!

To open the appliance, remove all detachable parts: Water container, driptray and cover, pod holder and collector.

1. To reach the brew chamber.

1.1. Open the top cover.
To open the top cover the brew chamber needs to be unlocked. Start at the back side of the top cover, using a plastic tool, and trace along the parting line of the top cover, undoing all the snaps. There are two small snaps on the front lower side of the brew chamber, undo them with a small flathead screwdriver (No. 0)

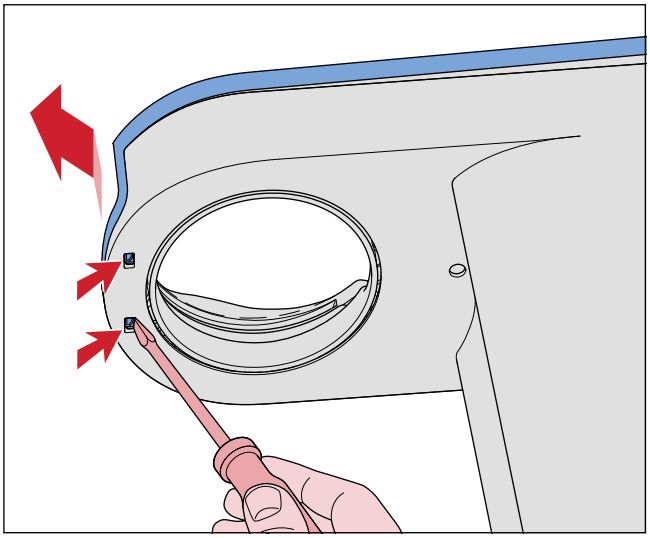

The top cover needs to be tilted forward to be removed. The flat cable **W** from the main PCBA to the UI PCBA is still attached to the User Interface panel, and can easily be unplugged.

The brew chamber can now be removed by unscrewing the two screws (**C**, T15), and undoing the hose connection (**g**) from the one way valve.

2. To reach internal components like Boiler or Pump.

2.1. Remove the screw (**A**, T15) from the bottom side of the appliance.

2.2. Remove the screw (**B**, T15) from the bottom side of the appliance to remove the back plate and undo the hose connection (**g**) from the one way valve (if not done so already).

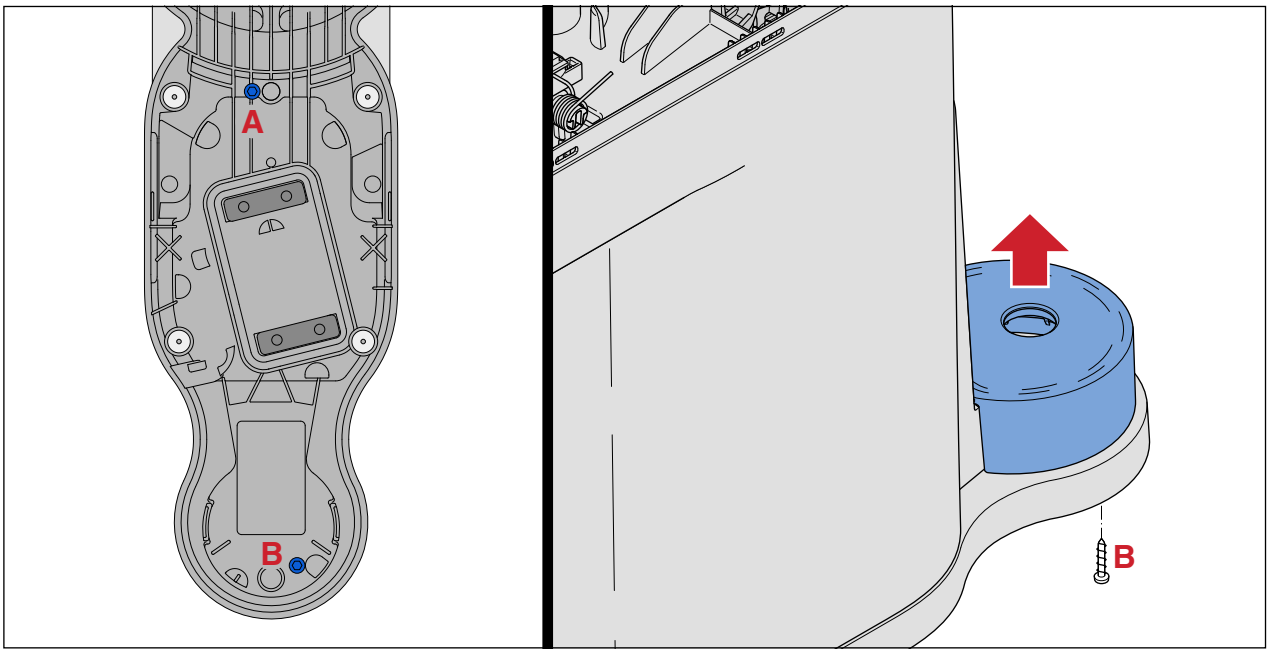

The socked tube (**a**) is still connected to the water container socket, and can easily be pulled off.

2.3. Remove the housing.
To remove the housing, start at the back side and undo the clicks (**1**) on either side of the back plate, next undo the snaps on the front of the housing (**2**), undo them with a flathead screwdriver. Make sure that none of the snaps snap back.

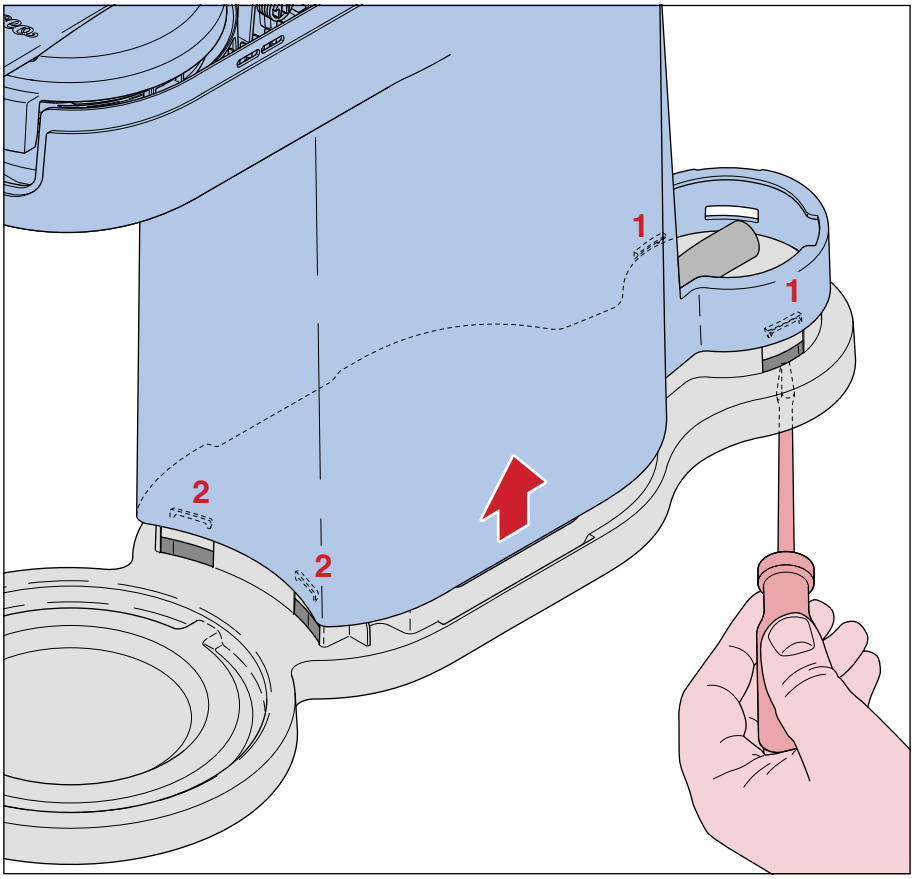

Remove the housing upwards from the rest of the appliance, but mind flat cable running through the guide on the inside of the housing and the water level sensor still connected to the inside of the housing.

You can now access the Boiler and Pump, to remove them, undo the electrical connections and hoses, and reinstall in the reverse order. Any Ty-wrap that has been removed needs to be replaced by a new one, and tightened with the specified forces.

3. To replace the PCBA.

3.1. Unscrew the inner frame.
Unscrew the two screws (**D**, T15) holding the inner frame in place, take special care to note the proper wire routing, and make sure reinstalling the PCBA will be done in an identical way.

Descaling

Scale builds up inside the machine during use. It is essential to descale the SENSEO® coffee machine when the CALC Light goes on. If the descaling procedure is not performed correctly, scale residue remains behind in the machine. This causes scale to build up more quickly and may cause permanent and irreparable damage to the machine.

Use the correct descaling agent (HD7011, HD7012 only). It has been developed to ensure better machine performance and operation. Never use a descaling agent based on mineral acids such as Sulphuric acid, Acetic acid (vinegar) or Hydrochloric acid. These descaling agents may damage your SENSEO® coffee machine.

For detailed instructions please refer to the Directions For Use, chapter CALC.

Volume adjustment

Note: Volume adjustment may only be carried out in case the repair technician is sure there is no underlying cause (e.g. User programmable volume, leakage, incorrect voltage setting, etc.) for the deviation in volume from the factory default.

Every time a PCBA is replaced for whatever reason the 1-cup & 2-cup setting both need to be separately adjusted/calibrated!
There is no country selection option therefore adjust both 1-cup & 2-cup recipes within the right volumes following the table page 2.

For the correct procedure on Volume measurement, please refer to the SENSEO® Repair process.

How to adjust the volume output:

1-cup

1. Make sure the boiler is filled properly, otherwise perform the Flush before first use procedure, according to the instructions in the DFU.
2. Make sure the top collector and 1-cup pod holder, without a coffee pod is installed in the appliance.
   Calibrate the scale you are going to use for the measurement, by placing the empty cup and switching it on.
3. Press the 1-cup coffee button to start a regular coffee brewing process. When finished also pour the leftover water in the pod holder into the cup.
4. Measure the output and compare to the specifications you find on page 2.
5. Determine the deviation from the specification, the deviation can be adjusted in steps of 3,5 mL.
   The calculated deviation divided by 3,5 will tell you how many steps (times you need to actuate the button) you need to in-, or decrease the value.
6. Follow the steps as mentioned under Service modes - "Manual pump adjustment" to recalibrate the pump.
7. Measure the newly calibrated volume, and repeat steps 4-6 if necessary.

2-cup:

Repeat steps 1 to 7 to calibrate/adjust for the 2-cup recipe. (you can continue using the 1-cup podholder)

Manual pump adjustment

1. Keep the 1-cup and 2-cup button pressed while connecting the appliance to the mains.
2. The buttons can be released when the 1-cup and 2-cup LEDs are switched on.
   You entered automatically the 1-cup pump time adjusting step.
3. **1-cup adjustment**:
   a. Press and release the 1-cup button to decrease the calibration value.
      The 1-cup and 2-cup LEDs blink one time.
   b. Press and release the 2-cup button to increase the calibration value.
      The 1-cup and 2-cup LEDs blink one time.
4. Store new **1-cup** pump time values:
   Press and release the 1-cup and 2-cup buttons to store the calibration value.
   The 1-cup and 2-cup LEDs blink rapidly 3 times.
   You enter automatically the 2-cup pump time adjusting step, 1-cup and 2-cup buttons are on.
5. **2-cup adjustment**:
   a. Press and release the 1-cup button to decrease the calibration value.
      The 1-cup and 2-cup LEDs blink one time.
   b. Press and release the 2-cup button to increase the calibration value.
      The 1-cup and 2-cup LEDs blink one time.
6. Store new **2-cup** values:
   Press and release the 1-cup and 2-cup buttons to store the calibration value.
   The 1-cup and 2-cup LEDs blink rapidly 3 times.
   The 1-cup & 2-cup LEDs will switch off and you exit the justification routine.

Boiler reset

1. Keep the 1-cup button pressed while connecting the appliance to the mains.
2. Button can be released when the 2-cup LED blinks rapidly

Test procedure:

The test procedure allows you to check the basic functions of the appliance.

1. Test step 1: Enter the test procedure:
    a. Keep the 2-cup button pressed while connecting the appliance to the mains.
    b. The button can be released when the 1-cup, 2-cup and jug LED are switched on.
    Heater and pump should be off.
2. Test step 2: 1-cup button, 1-cup LED and heater
    a. Press the 1-cup button and hold it.
    b. 1-cup LED and heater turn on. Other LEDs and the pump are off. Heater is on for a maximum of 3 seconds or if 1-cup button is released.
    c. Release the 1-cup button.
    d. Heater turns off, 1-cup LED remain on.
3. Test step 3: 2-cup button, 2-cup LED and pump
    a. Press the 2-cup button and hold it.
    b. 2-cup LED and pump turn on. Other LEDs and the heater are off.
    c. Release the 2-cup button.
    d. Pump turns off, 2-cup LED remain on.
4. Test-step 4: Test temperature sensor and descale LED
    a. Press the 1-cup button and hold it.
    b. The descale LED turns on. Other LEDs and the heater are off.
    c. If the temperature sensor is connected and has the right value (approx. 1.5 kOhm) the pump turns on.
    d. Disconnect the temperature sensor and the pump turns off.
    e. Release the 1-cup button, CALC LED remain on.
5. Test-step 5: Test water level sensor
    a. Press the 2-cup button and hold it.
    b. The 2-cup LED turns on. Other LEDs and the heater are off.
    c. Hold a magnet for the water level sensor and the pump turns on.
    d. Remove the magnet and the pump turns off.
    e. Release the 2-cup button.
6. To proceed to the final test step shortly push the 1-cup button.
    (Pump starts shortly, 1-cup and CALC LED remain on)
7. Test-step 7: Test Jug button
    a. Press the jug button and hold it.
    b. All LEDs and the heater are off.
    c. The pump turns on after ± 300 ms.
    d. Release the jug cup button.
    e. Descale LED and jug button LED turn on and the pump turns off.
8. End of test procedure.
    Unplug appliance from the mains to exit test procedure.

Pos	Service code	Description	Remark
1	4222 259 65942	Padholder assy Switch 1-cup	Deep black
110		Padholder 1-cup	
120		Coffee spout 1-cup	Deep black
2	4222 259 65952	Padholder assy Switch 2-cup	Deep black
210		Padholder 2-cup	
220		Coffee spout 2-cup	Deep black
3	4222 247 75762	Top collector	Deep black
4	4222 247 75782	Driptray cover	Deep black
5	4222 247 75772	Driptray	Deep black
6	4222 259 67511	Filter holder assy incl. Lid	
610		Filter holder lid	
620		Filter holder	
7	4222 259 63771	Thermal jug assy incl. Lid	Black
8	9965 100 70806	Thermal jug lid	Black
9	4222 247 75141	Coffee spoon	
10	4222 259 65932	Water container assy incl. Lid	Deep black
1010		Water container lid	Deep black
1020		Valve seal	
1030		Valve spring	
1040		Valve rod	
1050		Float spring	
1060		Float assy	
1070		Water container	Transparent
11	4222 259 60072	One way valve	
12	4222 247 75522	Housing	Deep black
13	4222 247 59473	Sensor housing	
14	4222 259 65902	Top cover assy	Deep black
1410		Top cover	Deep black
1420		Buttons rubber	
1430		Buttons plastic	
1440		UI house top	
1450		UI PCBA	
1460		UI house bottom	
15	4222 259 65892	Back plate assy	Deep black
1510		WC Sealing	
1520		Filter	
1530		WC Socket	
16	4222 247 72692	Lid cover	Deep black
17	4222 259 66712	Brew chamber assy	Deep black
1710		Lid hinge cover	

Pos	Service code	Description	Remark
1720		Lid spring	
1730		Hose	
1740		Lever	Deep black
1750		Lever frame	
1760		Rod (2x)	
1770		Slider left	
1780		Slider right	
1790		Slider spring	
17100		Lid frame	
17110	4222 240 05991	Ejector pin (2x)	
17120	4222 247 08121	BC seal	
17130	4222 247 72611	Distribution disk	
17140		Brewchamber bottom	Black
18	4222 247 72573	Inner frame	
19	4222 259 65982	Main PCBA SENSEO Switch	220 - 240 V
20	4222 247 08101	L-bend	
21	4222 240 02041	Hose clamp	
22	4222 259 61291	Pressure hose assy	
23	4222 247 75502	Base plate	Fusion black
24	4222 247 69442	Suspension bracket	
25	4222 244 50693	Tie wrap boiler	
26	4222 259 37244	Pump ULKA HF	230 V~50 Hz
27	4222 247 43690	Boiler pin cover	
28		Hose valve assy	
29	4222 247 69552	TCO cover	
30		Boiler assy TCO	Metal - 230 V
3010	4222 259 53272	Boiler	Metal - 230 V
3020	4222 247 05134	O-ring (NTC)	
3030	4222 240 00892	Bracket	
3040	4222 259 60501	NTC	
3050	4222 248 56582	Screw	
3060	4222 248 56001	TCO	
31	4222 247 08252	Hose socket	
32	4213 247 05256	Foot	
33	4222 247 06301	Pump damper	
100	4222 244 50680	Tie wrap	

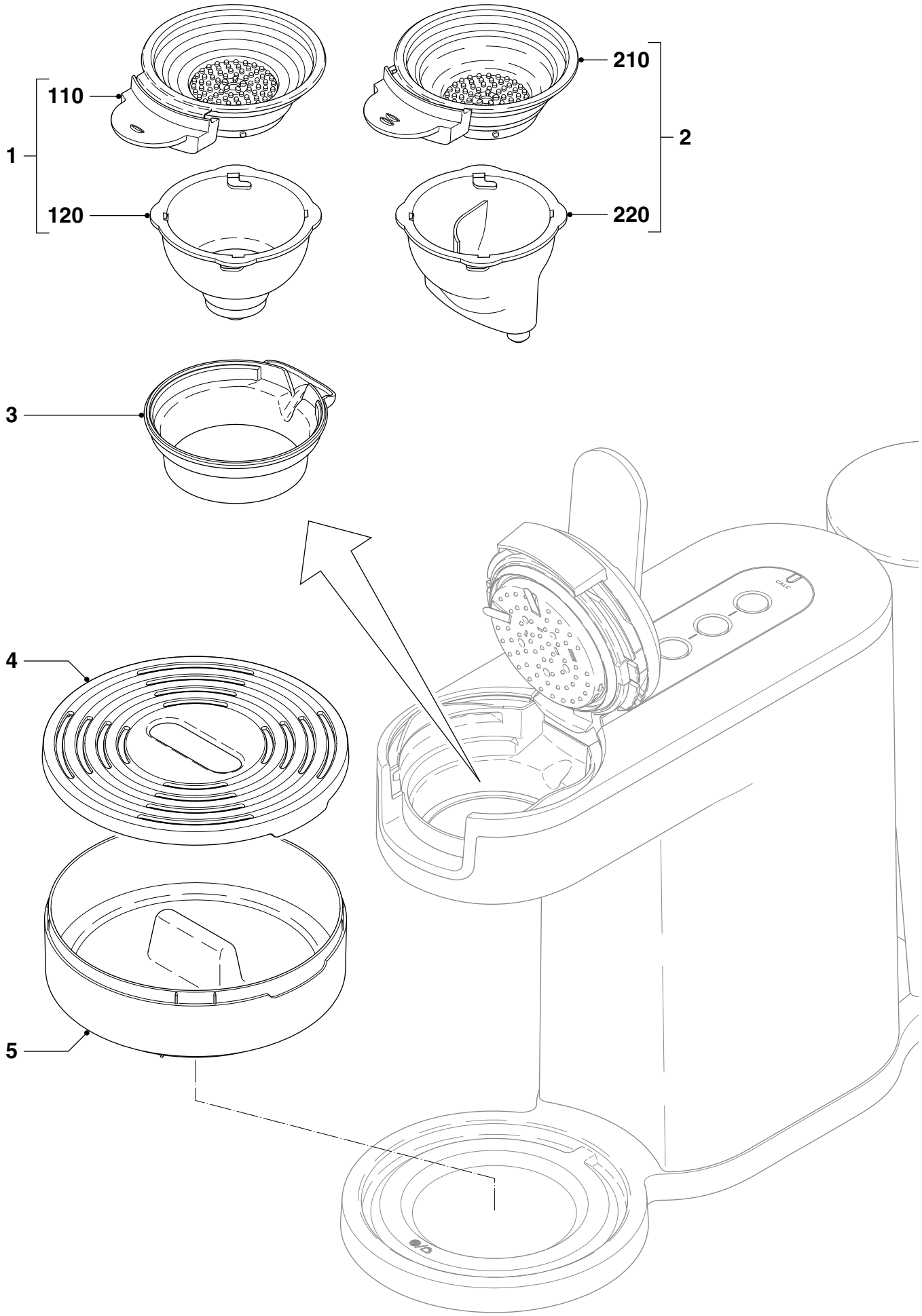
110
1
120
210
2
220
3
4
5
CALC

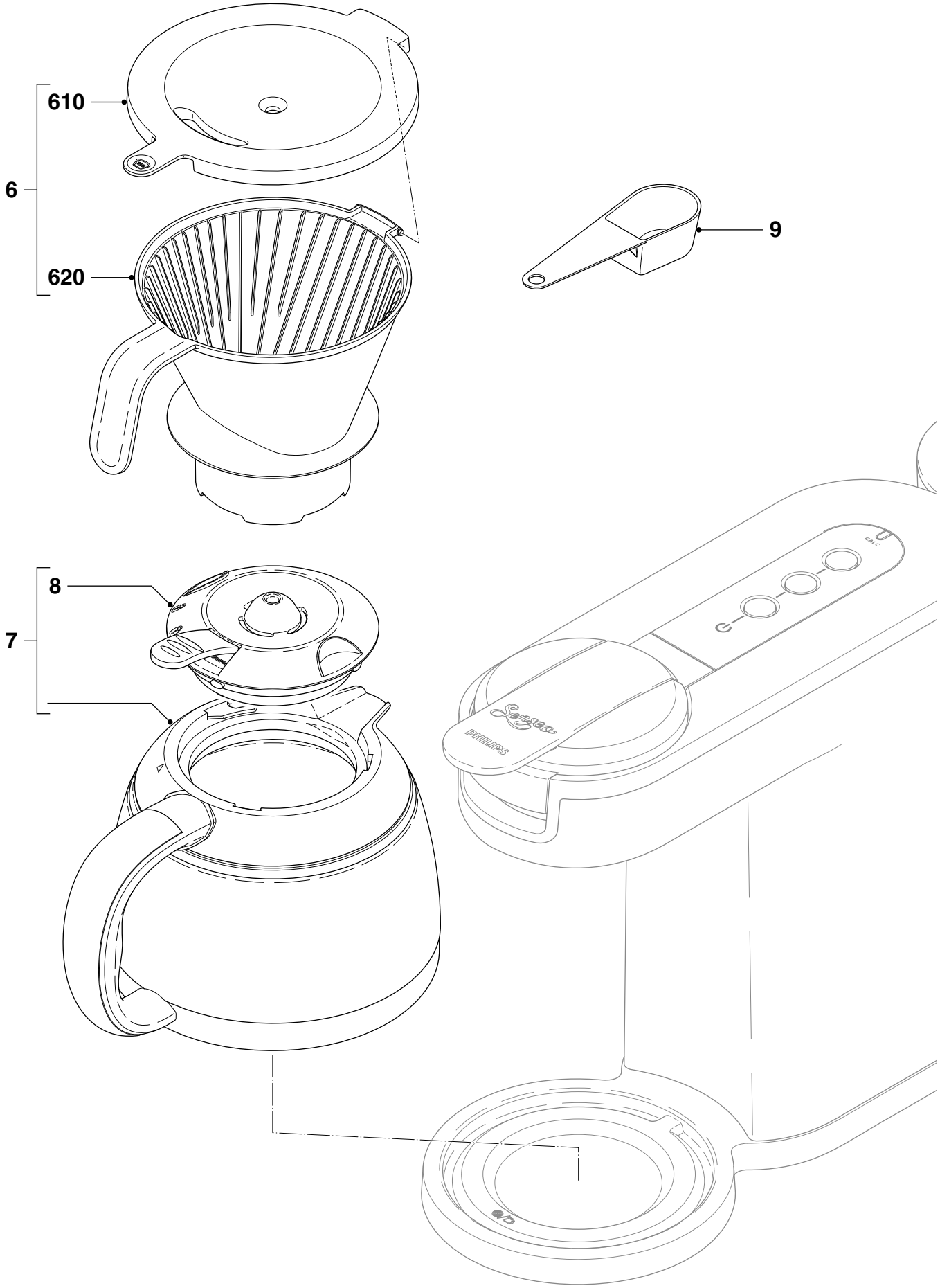
610
6
620
9
8
7
Senseo
PHILIPS
CALC

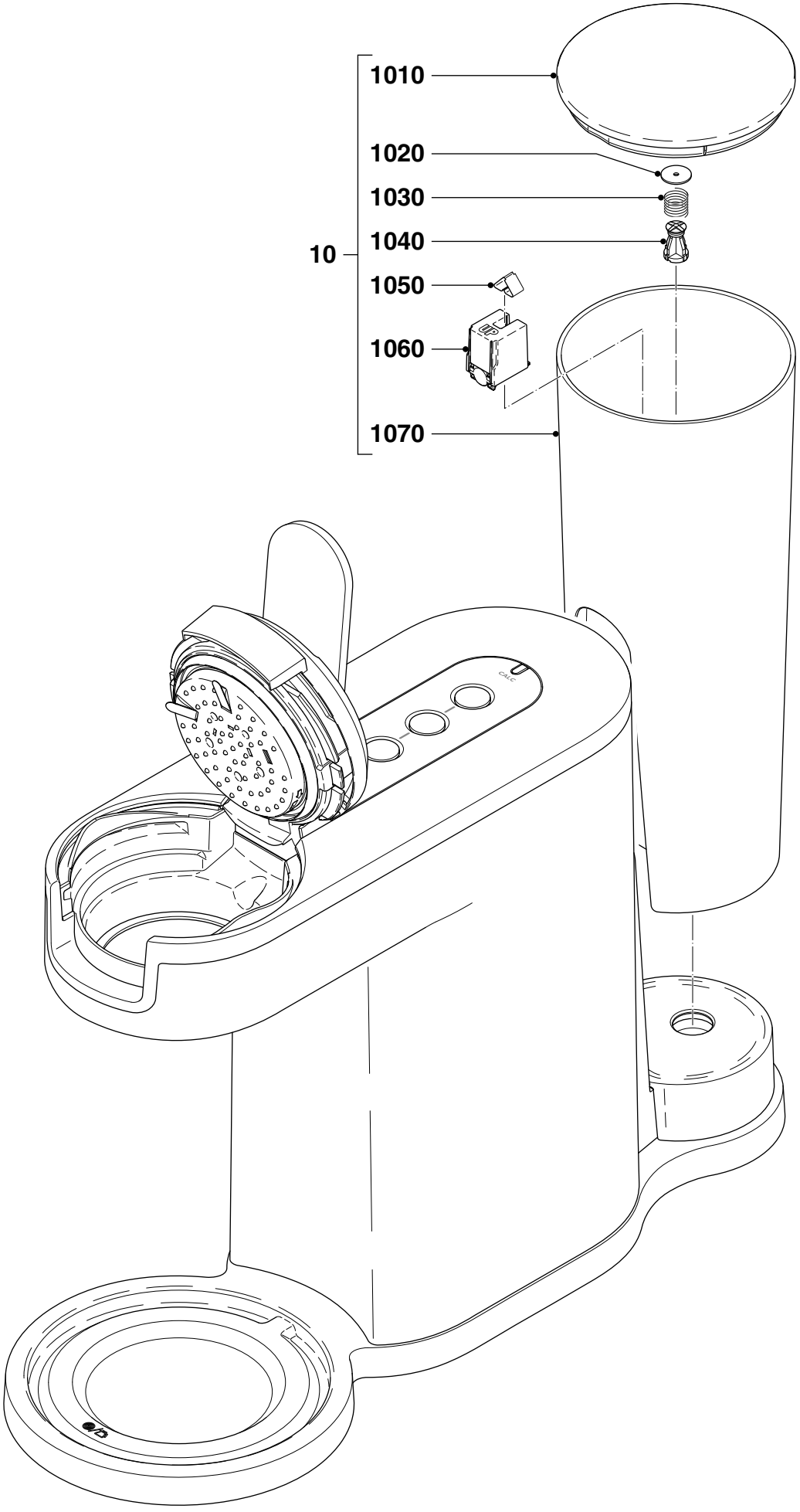
1010
1020
1030
1040
10
1050
1060
1070

HD7892/60 /61

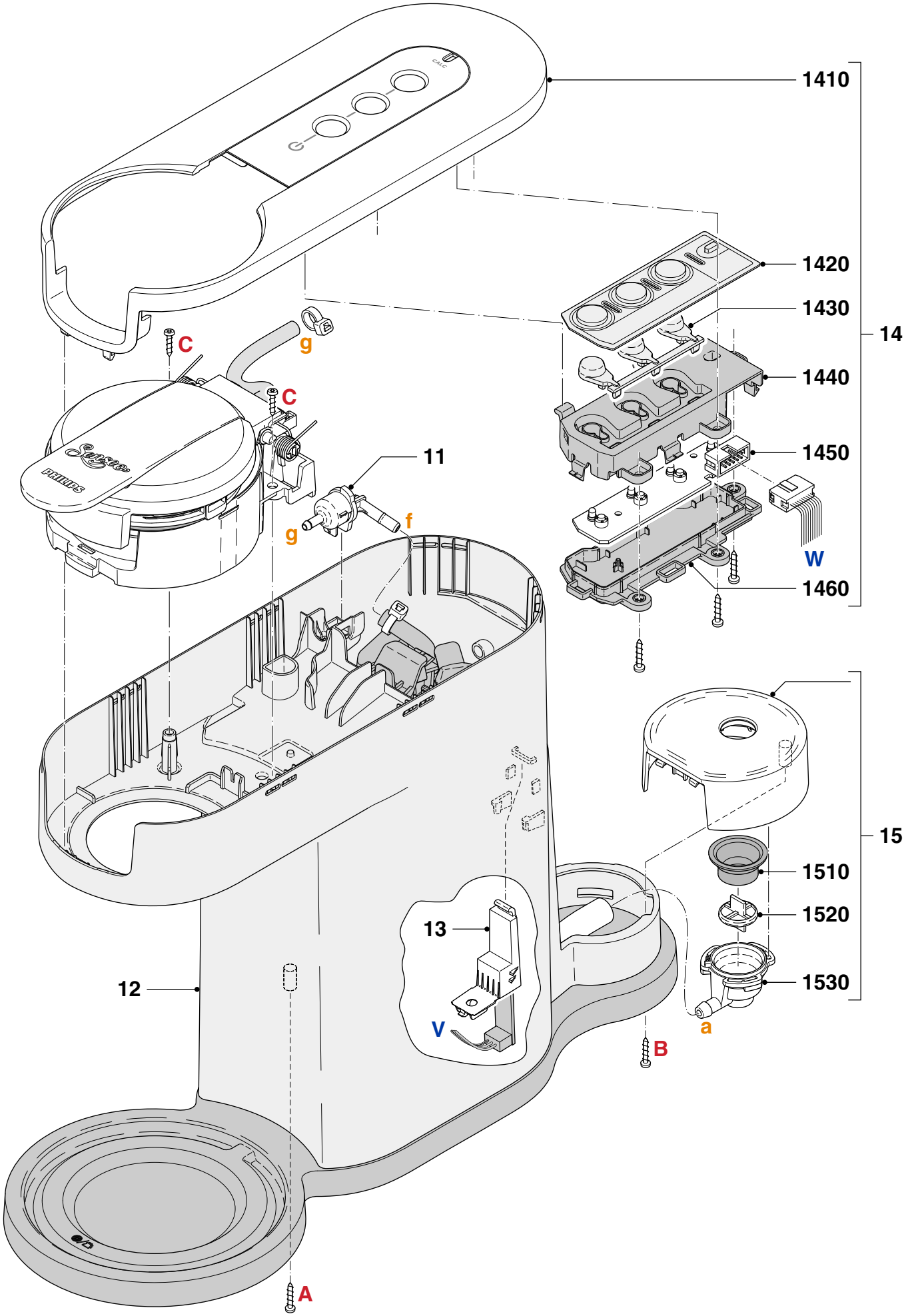
1410
1420
1430
1440
1450
1460
14
C
C
g
11
g
f
W
15
1510
1520
1530
13
V
12
a
B
A

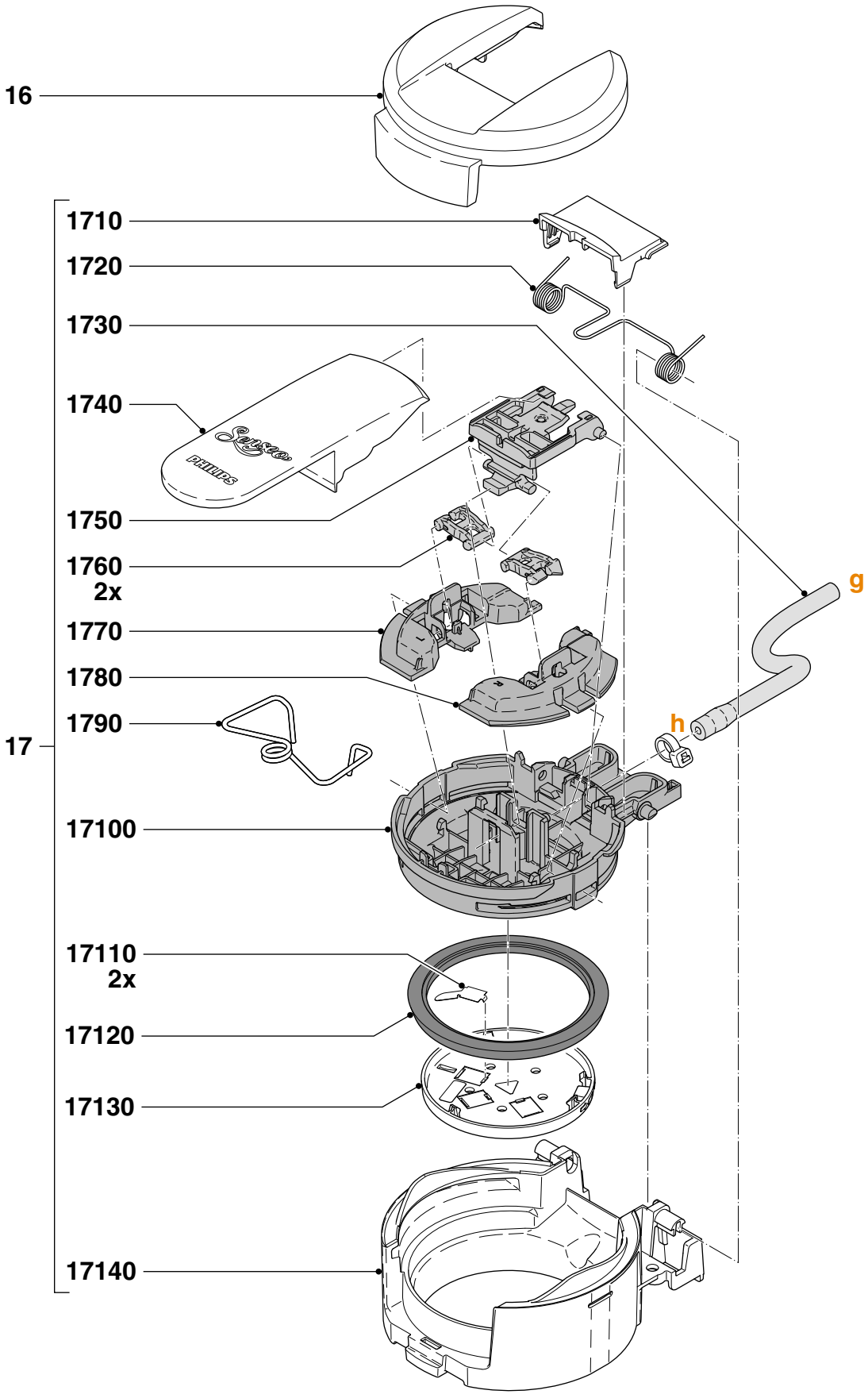
16
1710
1720
1730
1740
1750
1760
2x
1770
1780
1790
17
17100
17110
2x
17120
17130
17140
g
h

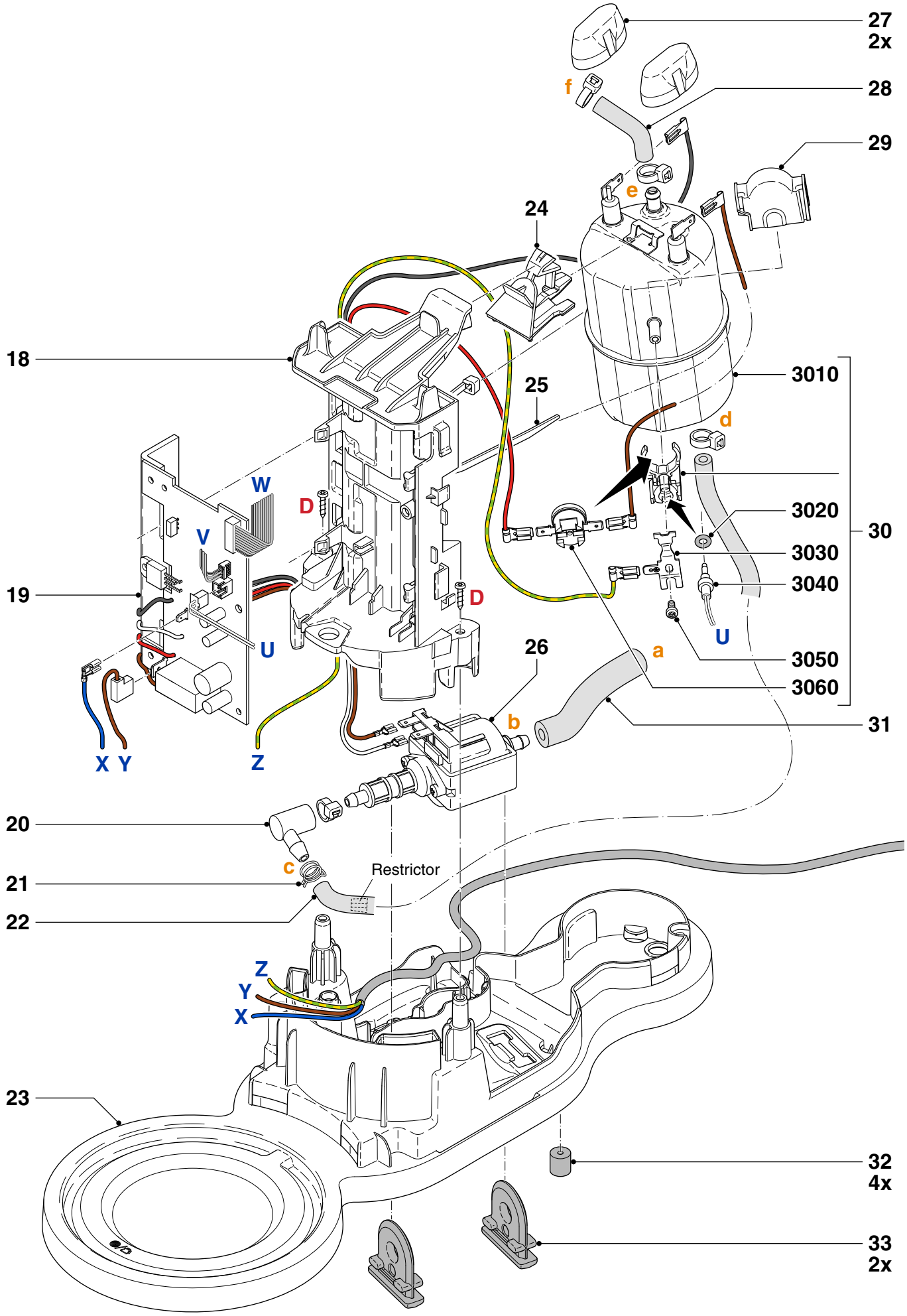
27
2x
28
29
f
e
24
18
25
3010
d
W
D
V
3020
30
3030
3040
19
D
U
U
26
a
3050
3060
b
31
X Y
Z
20
c
Restrictor
21
22
Z
Y
X
23
32
4x
33
2x